FIRST ANGLE PROJECTION (ALL DIMENSIONS ARE IN mm)

FORM: DG 46(B)

DRAWING NO. 0-13100-D5004

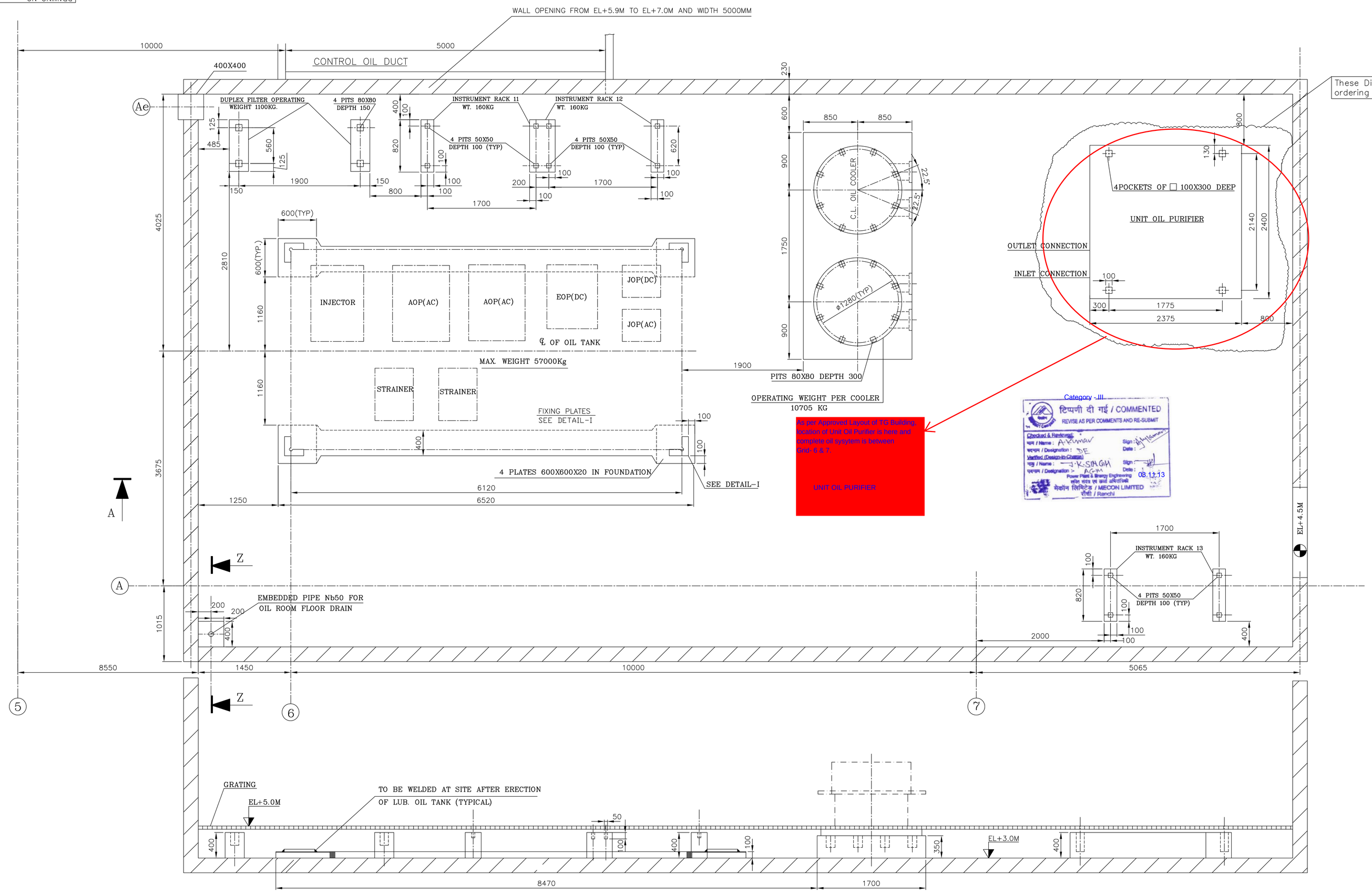

These Dinension shall be finalisided only after final ordering of Oil purifier as per vendor drawing

As per Approved Layout of TG Building, location of Unit Oil Purifier is here and complete oil sysytem is between Grid. 6 & 7

UNIT OIL PURIFIER

Category - III
टिप्पणी दी गई / COMMENTED
REVISE AS PER COMMENTS AND RE-SUBMIT
Checked & Reviewed
कार्य / Name : A.Kumar Sign: Date:
पदनाम / Designation : SE
Verified, Cleared-in-Charge
कार्य / Name : J.K.SINGH Sign: Date: 08.12.13
पदनाम / Designation : A.G.M
Power Plant & Energy Engineering
मेकॉन लिमिटेड / MECON LIMITED
राँची / Ranchi

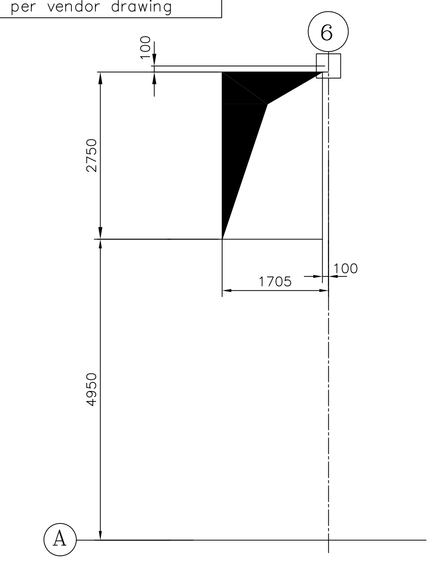

OPENING AT+10M. FLOOR FOR OIL CANAL DUCT

(REFER DRG. NO. 0-13100-D5001)

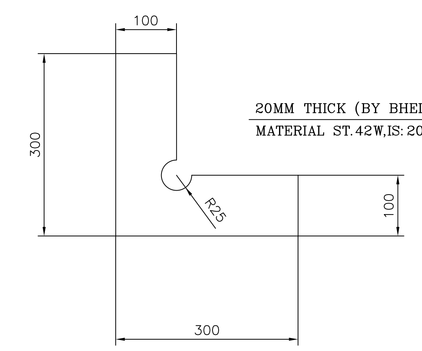

DETAIL-I

SECTION-AA

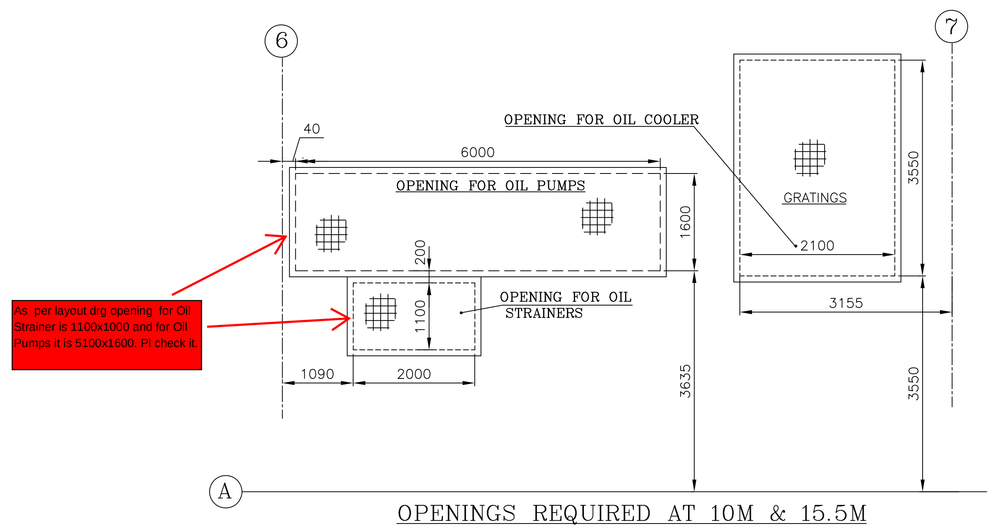

OPENINGS REQUIRED AT 10M & 15.5M

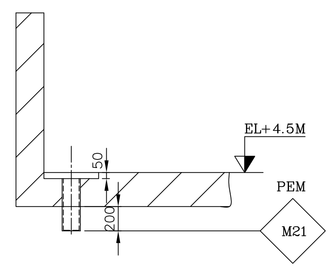

SECTION Z-Z

NOTES:-

1. IN OIL ROOM A GRATING FLOOR AT EL+5.0M IS RECOMMENDED TO BE PROVIDED.
2. ALL THE CONCRETE SURFACES WHICH ARE LIKELY TO COME IN CONTACT WITH OIL SHOULD BE PAINTED WITH OIL RESISTANT PAINT.
3. OIL ROOM WALLS MUST BE CONSTRUCTED ONLY AFTER INSTALLATION OF OIL TANK AND OIL PURIFIER.
4. HANDLING OF PURIFIER IS NOT ENVISAGED BY E.O.T. CRANE.
5. THERE SHOULD BE NO OPENING IN THE OIL ROOM WALLS BELOW EL+5.0M SO AS TO CONTAIN WHOLE OF THE OIL OF SYSTEM IN CASE OF ANY ACCIDENT.
6. OIL ROOM FLOOR SHOULD HAVE SLOPE OF 1° TOWARDS DRAIN PIT.
7. ALL THE EMBEDMENTS SHOWN ARE TO BE SUPPLIED BY BHEL PEM AND PSER, EXCEPT OTHERWISE STATED.

GRADE OF UNTOL. DIM.:-
M/CG- V/C/M/F AA 0230208
WELDING-A/B/C/D-AA621104
GAS CUTTING-'T3'AA0621101

REV.	DATE	ALTERED / CHECKED

CBOM NO. | STATUS OF DRG.
AGREED DEPT. | NAME | SIGN | DATE

Client: NTPC-SAIL POWER COMPANY (P) LIMITED
Consultant: (मेकॉन लिमिटेड) MECON LIMITED

TYPE OF PRODUCT OR NAME OF CUSTOMER/ PROJECT: STEAM TURBINE ROURKELA PP-II EXPANSION PROJECT (1X250 MW)

BHARAT HEAVY ELECTRICALS LTD. HARDWAR

	NAME	SIGN	DATE	NO.OF VAR.
DRN	PARDEEP	-Sd-	31.10.2016	—
CHD	A.S.RAJPUT	-Sd-	31.10.2016	
APD	R.PANJA	-Sd-	31.10.2016	73 , 74

DEPT. PED | CODE 4066 | SCALE — | WEIGHT(Kg.) — | REF. TO ASSY. DRG. — | NO. — | NO.OF ITEMS — 75 , 77

TITLE: OIL ROOM ARRANGEMENT | CARD CODE — | DRAWING NO. 0-13100-D5004 | REV 00 | SHEET NO. 01 | NO.OF SHEETS 01

SIZE A0

REF. DRG NO. 013100A7004

INVENTORY NO. | SIGN & DATE

COPYRIGHT AND CONFIDENTIAL
IT MUST NOT BE USED DIRECTLY OR INDIRECTLY IN THE INTEREST OF THE COMPANY.